Formulate Fusion Kit 05

CFAB-K-05

Total graphic area: 219.453 X 111.355”h
Total visual area: 209.453”w X 101.355”h
Tapered size: 88.703”H
(3) Prints create one structure
Graphic at 20% of actual size

GRAPHIC CODES

CFAB-K-05 - Single sided
Total graphic area: 219.453”w X 111.355”h
Total visual area: 209.453”w X 101.355”h

CFAB-K-05 Double sided
Outside dimensions for tapered ring
Total graphic area: 219.453”w X 111.355”h
Total visual area: 209.453”w X 101.355”h
Inside dimensions for tapered ring
Total graphic area: 219.453”w X 111.355”h
Total visual area: 209.453”w X 101.355”h
If designing for Inside panels, please place on a different layer.
The dark grey areas are obstructed by (3) structures.

Please be sure to include the 5” bleed around the perimeter to compensate for the finishing of the graphics. Do not design any critical elements (text, logos, etc.) within 1” of the edge (see dotted lines).

General Artwork Guidelines
- cmyk color mode
- do not embed images, supply them
- resolution must be 100-120 ppi
- all fonts must be created to outlines

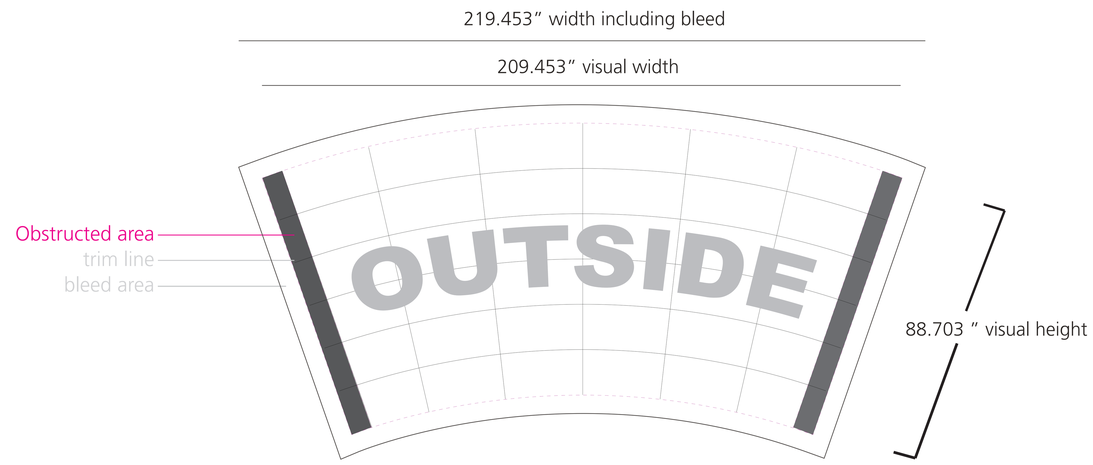

Design Here if ordering CFAB-K-05

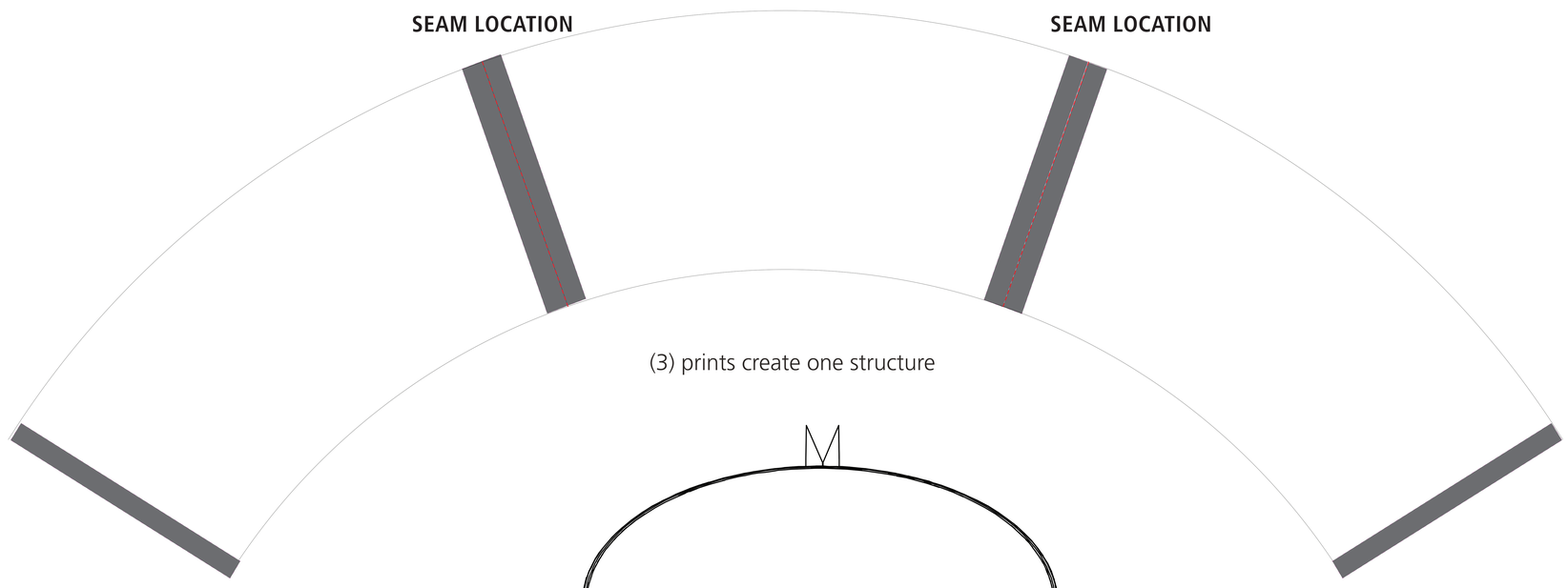
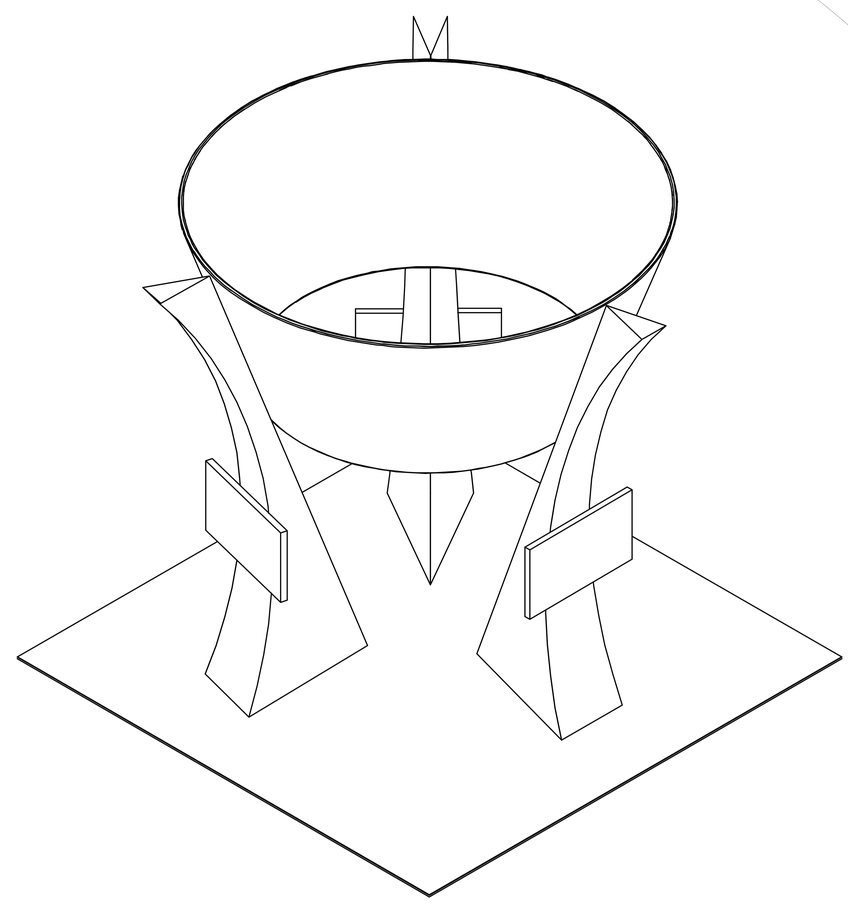
(3) prints create one structure