Merchandise Express
Kit 4

TEMPLATE @ 1/2 SIZE

Graphic Panels A, B and C
Total Graphic Area: 40.875"w x 97.25"h
Finished Graphic Area: 36.875"w x 93.25"h

Please be sure to include a 2" bleed around the perimeter of each graphic.

Please consider obstructions and spaces created by the extrusions when designing your graphics.

General Art Guidelines:
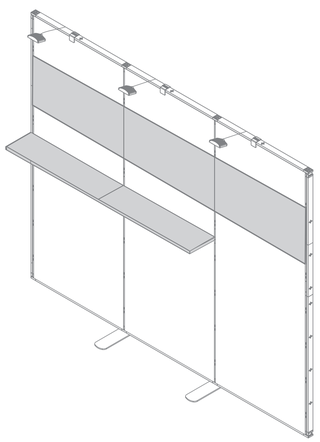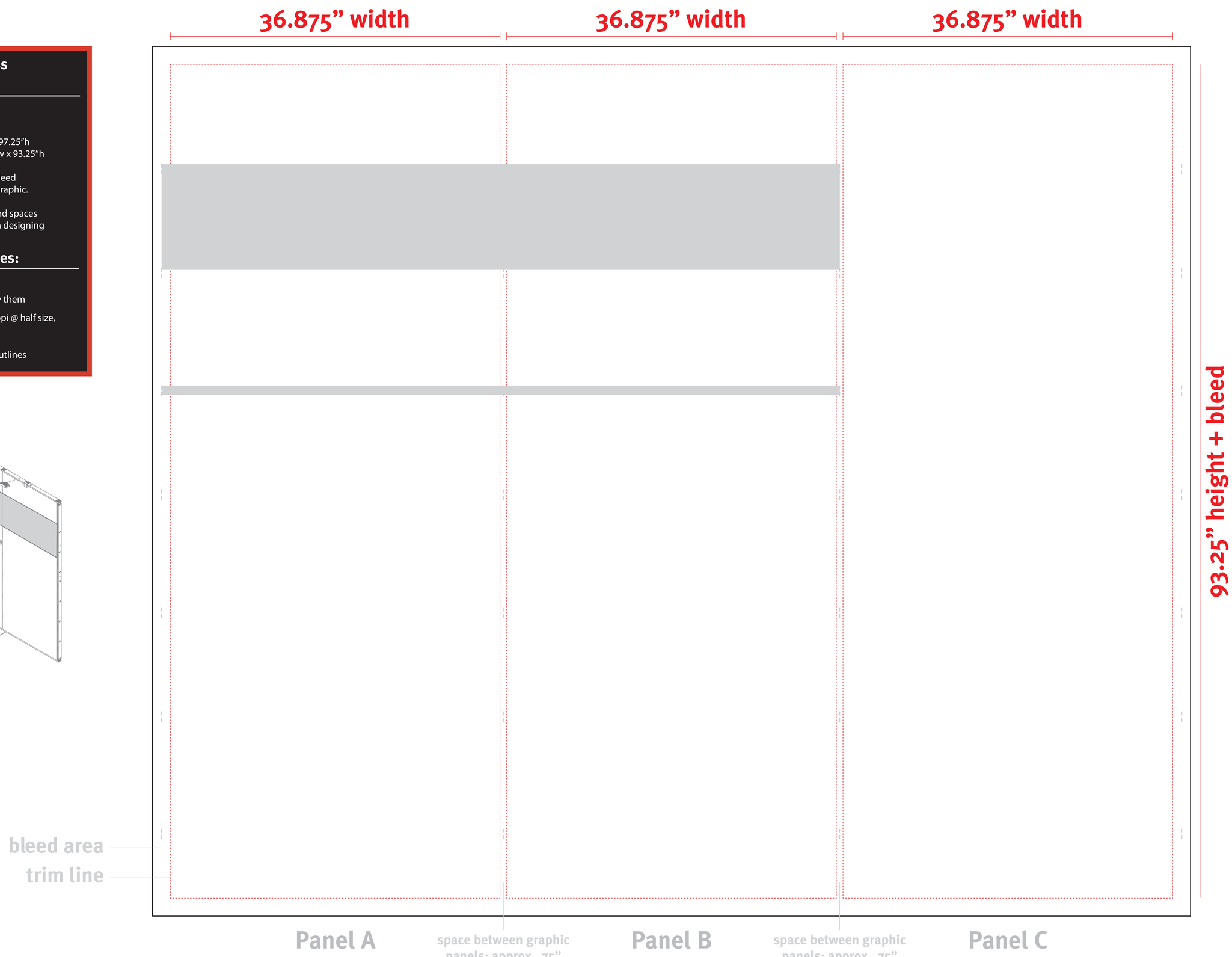
- CMYK Color
- Do not embed images, supply them
- Resolution must be 200-240 ppi @ half size, 100-120 ppi @ full size
- All fonts must be created to outlines